Work Order ID 70149

Monday, May 30, 2011 11:25:22 AM

Item ID: D3198-1
Revision ID:
Item Name: Fitting
Start Date: 5/30/2011 **Start Qty:** 5.00
Required Date: 6/10/2011 **Req'd Qty:** 5.00
Reference:

Accept

Setup **Start** **Stop**

Cust Item ID:
Customer:

Run **Start** **Stop**

Approvals: **Process Plan:** MK **Date:** 11-05-30 **Tooling:** _____ **Date:** _____
QC: _____ **Date:** _____ **SPC (Y/N):** _____ **Date:** _____

Draw Nbr	Revision Nbr
D3198	Rev A

Sequence ID/ Work Center ID	Operation Description	Set Up/ Run Hours	Tool ID	Tool #	Plan Code	Accept Qty	Reject Qty	Reject Number	Insp. Stamp
100 Waterjet FLOW CNC Waterjet 304.12	FLOW WATER JET Memo 1-Cut as per Dwg D3198 ☐Dwg Rev: A ☐Prog Rev: A ☐2- Deburr if necessary	0.00 0.00				11-5-30			6
110 QC Quality Control	QC2- Inspect parts off machine FAI/FAIB Memo	0.00 0.00				11-5-30			
120 QC Quality Control	QC8- Inspect parts - second check Memo	0.00 0.00				x6			

Sulos/30

Dart Aerospace Ltd

W/O:		WORK ORDER CHANGES					
DATE	STEP	PROCEDURE CHANGE	By	Date	Qty	Approval Chief Eng / Prod Mgr	Approval QC Inspector

Part No: _____ **PAR #:** _____ **Fault Category:** _____ **NCR:** Yes No **DQA:** _____ **Date:** _____

Resolution: _____ **Disposition:** _____ **QA: N/C Closed:** _____ **Date:** _____

NCR:		WORK ORDER NON-CONFORMANCE (NCR)						
DATE	STEP	Description of NC Section A	Corrective Action Section B			Verification Section C	Approval Chief Eng	Approval QC Inspector
			Initial Chief Eng	Action Description Chief Eng	Sign & Date			

NOTE: Date & initial all entries

H:\FORMS\Quality Assurance\approved QA\NCRWO RevE

Work Order ID 70149

Monday, May 30, 2011 11:25:22 AM

Item ID: D3198-1 **Accept** **Setup Start** **Stop**

Revision ID:

Item Name: Fitting

Start Date: 5/30/2011 **Start Qty:** 5.00 **Cust Item ID:**

Required Date: 6/10/2011 **Req'd Qty:** 5.00 **Customer:**

Reference:

Run Start **Stop**

Approvals: **Process Plan:** _____ **Date:** _____ **Tooling:** _____ **Date:** _____

QC: _____ **Date:** _____ **SPC (Y/N):** _____ **Date:** _____

Sequence ID/ Work Center ID	Operation Description	Set Up/ Run Hours	Tool ID	Tool #	Plan Code	Accept Qty	Reject Qty	Reject Number	Insp. Stamp
130	NC BRAKE	0.00							
Brake NC	**Memo**	0.00	SB 11/06/01						
Brake NC	1-Deburr if necessary ☐2-Form as per Dwg D3198								
140	QC5- Inspect part completeness to step on W/O	0.00	SB 11/06/01			(x6)			
QC	**Memo**	0.00							
Quality Control									
150	Grey Sandtex(Ref:4.3.5.6) per QSI005 4.3	0.00							
Powdercoat	**Memo**	0.00							
Powder Coating	START TIME: 8:45 ☐OVEN TEMPERATURE: 320°F ☐FINISH TIME: 9:15								

6X ∅ M 11/06/02

M115128

Dart Aerospace Ltd

W/O:		WORK ORDER CHANGES					
DATE	STEP	PROCEDURE CHANGE	By	Date	Qty	Approval Chief Eng / Prod Mgr	Approval QC Inspector

Part No: _____ **PAR #:** _____ **Fault Category:** _____ **NCR:** Yes No **DQA:** _____ **Date:** _____

Resolution: _____ **Disposition:** _____ **QA: N/C Closed:** _____ **Date:** _____

NCR:		WORK ORDER NON-CONFORMANCE (NCR)						
DATE	STEP	Description of NC Section A	Corrective Action Section B			Verification Section C	Approval Chief Eng	Approval QC Inspector
			Initial Chief Eng	Action Description Chief Eng	Sign & Date			

NOTE: Date & initial all entries

H:\fFORMS\Quality Assurance\approved QA\NCRWO RevE

Work Order ID 70149

Monday, May 30, 2011 11:25:22 AM

Item ID: D3198-1 **Accept** **Setup** **Start** **Stop**

Revision ID:

Item Name: Fitting

Start Date: 5/30/2011 **Start Qty:** 5.00 **Cust Item ID:**

Required Date: 6/10/2011 **Req'd Qty:** 5.00 **Customer:**

Reference:

Run **Start** **Stop**

Approvals: **Process Plan:** _____ **Date:** _____ **Tooling:** _____ **Date:** _____

QC: _____ **Date:** _____ **SPC (Y/N):** _____ **Date:** _____

Sequence ID/ Work Center ID	Operation Description	Set Up/ Run Hours	Tool ID	Tool #	Plan Code	Accept Qty	Reject Qty	Reject Number	Insp. Stamp
160	QC3- Inspect Part Finish	0.00				6.		BR 11-6-2.	
QC	Memo	0.00							
Quality Control									
170	Identify as per dwg & Stock Location 2/6A	0.00				11/6/2			
Packaging	Memo	0.00							
Packaging									
180	QC21- Final Inspection - Work Order Release	0.00						11/6/3	
QC	Memo	0.00							
Quality Control									

UMF 11-06-03

Dart Aerospace Ltd

W/O:		WORK ORDER CHANGES					
DATE	STEP	PROCEDURE CHANGE	By	Date	Qty	Approval Chief Eng / Prod Mgr	Approval QC Inspector

Part No: _____ **PAR #:** _____ **Fault Category:** _____ **NCR:** Yes No **DQA:** _____ **Date:** _____

Resolution: _____ **Disposition:** _____ **QA: N/C Closed:** _____ **Date:** _____

NCR:		WORK ORDER NON-CONFORMANCE (NCR)						
DATE	STEP	Description of NC Section A	Corrective Action Section B			Verification Section C	Approval Chief Eng	Approval QC Inspector
			Initial Chief Eng	Action Description Chief Eng	Sign & Date			

NOTE: Date & initial all entries

H:\fFORMS\Quality Assurance\approved QA\NCRWO RevE

Picklist Print

Monday, May 30, 2011 11:25:16 AM

Work Order ID: 70149

Parent Item: D3198-1

Parent Item Name: Fitting

Start Date: 5/30/2011 **Required Date:** 6/10/2011

Start Qty: 5.00 **Required Qty:** 5.00

Comments: IPP: A□03.11.11□New Issue□KJ/RF□
IPP Rev:B Now on Waterjet 07-01-09 JLM

Component Item ID/ Item Name	Replacement Item ID	Mfg/ Purch	Bin Item	Primary Location	Last Location	Route Seq ID	Unit of Measure	Qty on Hand	Qty per Kit	Total Qty	Qty Issued	Date Issued	Status
M304S11GA 304/316 0.125 Sheet		Purchased	No			100	sf	136.7000	0.105	0.552632	16 1B/1-5-30		

Location	Loc Qty	Loc Code
MAT020	136.7	
117494	136.7	

117494

Dart Aerospace Ltd

W/O:		WORK ORDER CHANGES					
DATE	STEP	PROCEDURE CHANGE	By	Date	Qty	Approval Chief Eng / Prod Mgr	Approval QC Inspector

Part No: _____ **PAR #:** _____ **Fault Category:** _____ **NCR:** Yes No **DQA:** _____ **Date:** _____

Resolution: _____ **Disposition:** _____ **QA: N/C Closed:** _____ **Date:** _____

NCR:		WORK ORDER NON-CONFORMANCE (NCR)						
DATE	STEP	Description of NC Section A	Corrective Action Section B			Verification Section C	Approval Chief Eng	Approval QC Inspector
			Initial Chief Eng	Action Description Chief Eng	Sign & Date			

NOTE: Date & initial all entries

H:\FORMS\Quality Assurance\approved QA\NCRWO RevE

DART AEROSPACE LTD	Work Order:	70149
Description: Fitting	Part Number:	D3198-1
Inspection Dwg: D3198 **Rev:** A		Page 1 of 1

FIRST ARTICLE INSPECTION CHECKLIST

[X] First Article [ ] Prototype

Drawing Dimension	Tolerance	Actual Dimension	Accept	Reject	Method of Inspection	Comments
Ø0.266	+0.006/-0.001	.266	✓		V IB 02	
4.280	+/-0.010	4.290	✓		V	
2.500	+/-0.010	2.509	✓		V	
3.420	+/-0.010	3.416	✓		V	
0.400	+/-0.010	.398	✓		V	
0.400	+/-0.010	.398	✓		V	
3.880	+/-0.010	3.882	✓		V	
2.100	+/-0.010	2.096	✓		V	
3.020	+/-0.010	3.016	✓		V	

Measured by:	IB	Audited by:	[illegible]	Prototype Approval:	N/A
Date:	11-5-30	Date:	11/05/30	Date:	N/A

Rev	Date	Change	Revised by	Approved
A	07.03.13	New Issue	KJ/JLM	
B	08.05.28	Ø0.266 was Ø0.270	KJ/DD	

Dart Aerospace Ltd

W/O:		WORK ORDER CHANGES					
DATE	STEP	PROCEDURE CHANGE	By	Date	Qty	Approval Chief Eng / Prod Mgr	Approval QC Inspector

Part No: _____ **PAR #:** _____ **Fault Category:** _____ **NCR:** Yes No **DQA:** _____ **Date:** _____

Resolution: _____ **Disposition:** _____ **QA: N/C Closed:** _____ **Date:** _____

NCR:		WORK ORDER NON-CONFORMANCE (NCR)						
DATE	STEP	Description of NC Section A	Corrective Action Section B			Verification Section C	Approval Chief Eng	Approval QC Inspector
			Initial Chief Eng	Action Description Chief Eng	Sign & Date			

NOTE: Date & initial all entries

DESIGN	DRAWN BY	DART AEROSPACE LTD HAWKESBURY, ONTARIO, CANADA	
CHECKED	APPROVED	DRAWING NO. D3198	REV. A SHEET 1 OF 1
DATE 03.09.26		TITLE FITTING	SCALE 1:1

A	03.09.26	NEW ISSUE

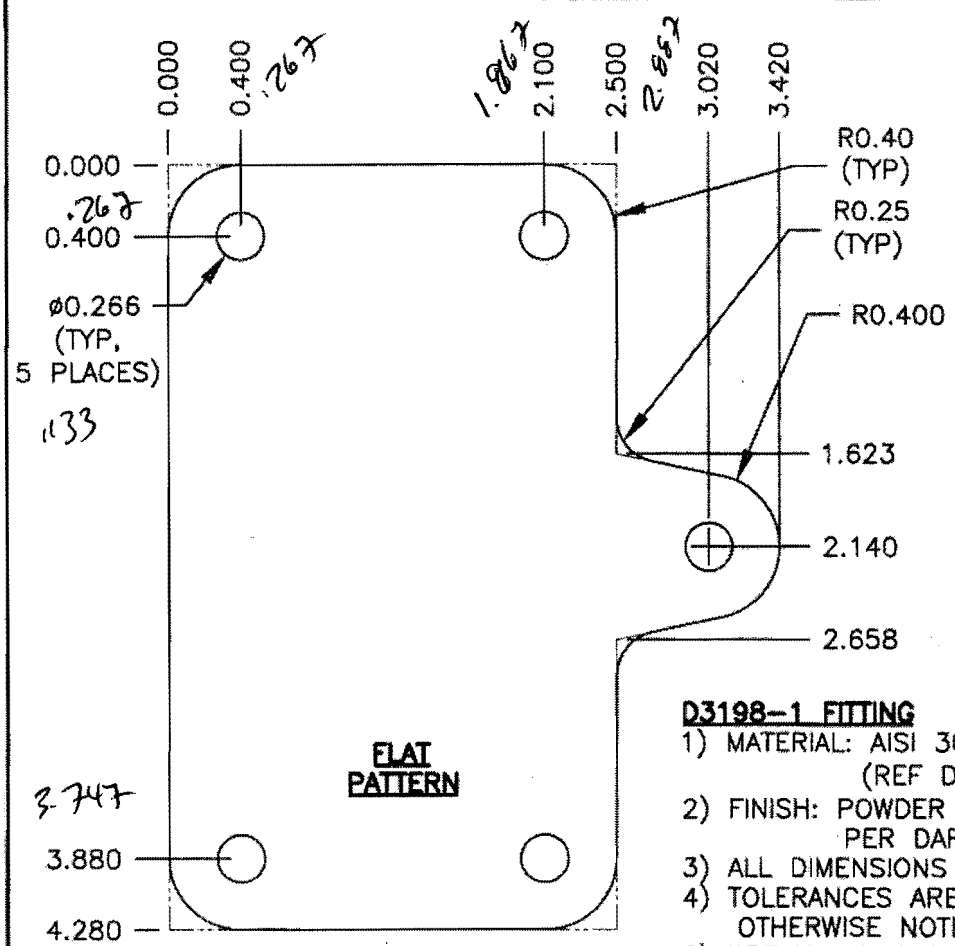

#20149

D3198-1 FITTING

1) MATERIAL: AISI 304/316 SS SHEET 0.125 THICK (REF DART SPEC. M304S11GA)
2) FINISH: POWDER COAT GREY SANDTEX (4.3.5.6) PER DART QSI 005 4.3
3) ALL DIMENSIONS ARE IN INCHES
4) TOLERANCES ARE PER DART QSI 018 UNLESS OTHERWISE NOTED
5) BREAK ALL SHARP EDGES 0.005 TO 0.015

RELEASED 03.10.10

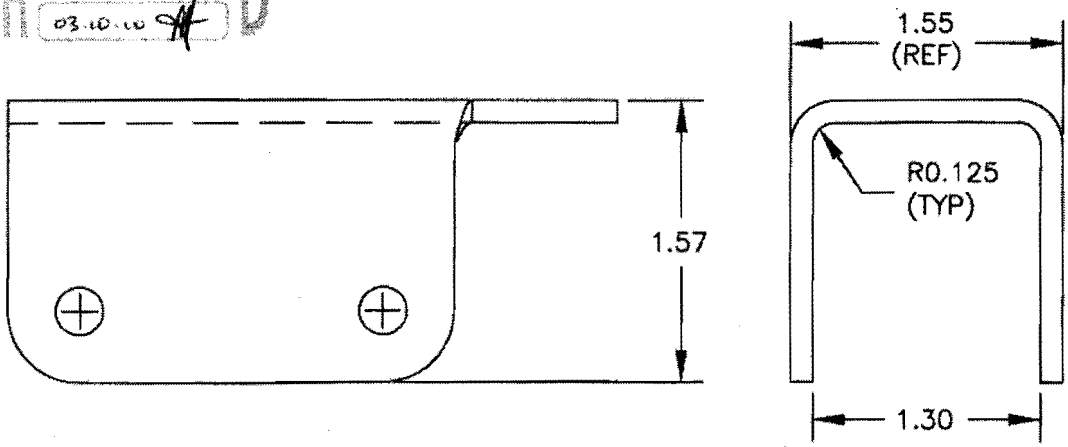

BEND DETAIL

Dart Aerospace Ltd

W/O:		WORK ORDER CHANGES					
DATE	STEP	PROCEDURE CHANGE	By	Date	Qty	Approval Chief Eng / Prod Mgr	Approval QC Inspector

Part No: _____ **PAR #:** _____ **Fault Category:** _____ **NCR:** Yes No **DQA:** _____ **Date:** _____

Resolution: _____ **Disposition:** _____ **QA: N/C Closed:** _____ **Date:** _____

NCR:		WORK ORDER NON-CONFORMANCE (NCR)						
DATE	STEP	Description of NC Section A	Corrective Action Section B			Verification Section C	Approval Chief Eng	Approval QC Inspector
			Initial Chief Eng	Action Description Chief Eng	Sign & Date			

NOTE: Date & initial all entries

H:\fFORMS\Quality Assurance\approved QA\NCRWO RevE